CONTROL HANDLE MINISTRO

The control lever MINISTRO has set new standards for operational control of vehicles and (mobile) machines. Particularly the ergonomic and very stable design distinguishes this new control handle from others available in the market. Assembly to the vehicle is very simple with the integrated threaded adapter. The incorporated accelerator switch STIPO possesses an ideal position for the operator and is available in different output signal variations. The twist grips, available in different standard colors, can come preset – straight as shown or can be rotated in 22.5° increments to give an improved ergonomic feel respective of the application.

- Ergonomically formed
- Simple fastening to the vehicle with the integrated threaded insert
- Twist grips rotational positions is adjustable at 22.5° increments
- Different standard colors for the twist grips are available
- Accelerator switch STIPO is freely selectable with a “single ended” or “wig-wag” output characteristic, as well as, with high or low active digital signals.
- Electronics protection class IP 54

System Components

Technical Specifications	
Operating Conditions	
Maximum stress	90 kg each direction
Protection class	IP 54
Operating temperature	-40°C to +80°C
Air humidity	95 % r.L.

Required Details on Inquiries

- Characteristic curve, output voltage, digital signals
- Different version of the accelerator switch see seperate datasheet „STIPO“
- Color of the grip (some standard colors available)
- Also usable without accelerator switch

Special Design

- Custom specific color of the grip
- Customspecific output signal
- Integrated hand detecting sensor
- Customspecific shape of the grip

Order Data

Part No.	Description
3108-00030-xx	Control handle MINISTRO will be configured user-specific
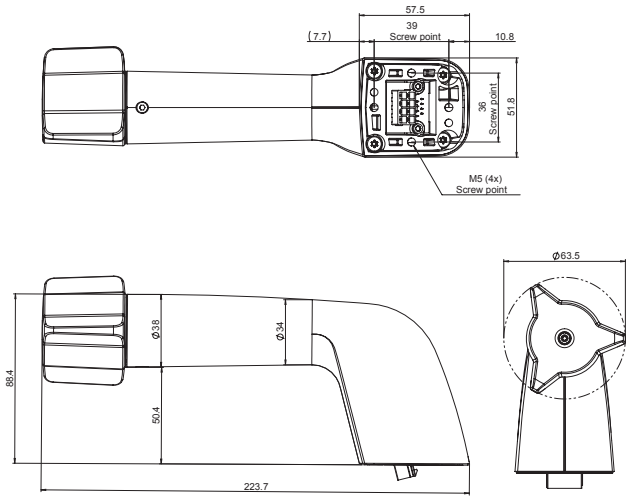
Dimensions [mm]